The Talon Hinged Clips

Standard Hinged Clips

The Talon Hinged Clip offers a 360° fixing for pipework, manufactured in the UK this high quality polypropylene clip offers the user a secure fixing. All sizes of the Hinged Clips can be connected together via the dovetail to allow for equal pipe spacing.

Colours & sizes

Natural

15mm

22mm

28mm

Reducers and Spacers also available, see data sheets for more details.

Single Hinged Clips

Compatible with size 10 countersunk screw.

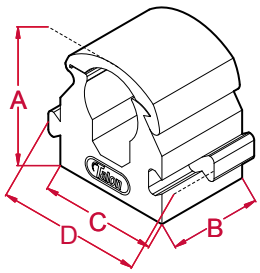

TS10
10mm Single Hinged Clip
A: 21.4mm **B:** 15mm
C: 19mm **D:** 23.5mm

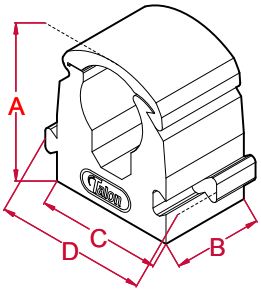

TS12
12mm Single Hinged Clip
A: 25.3mm **B:** 15mm
C: 21mm **D:** 25.5mm

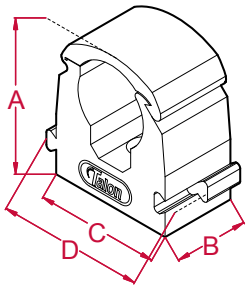

TS15
15mm Single Hinged Clip
A: 30mm **B:** 15mm
C: 25mm **D:** 29.5mm

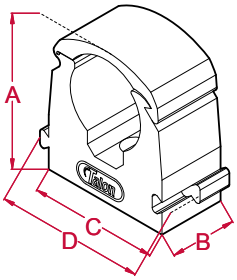

TS18
18mm Single Hinged Clip
A: 33.5mm **B:** 15mm
C: 29mm **D:** 33.5mm

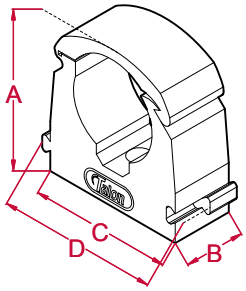

TS22
22mm Single Hinged Clip
A: 38.2mm **B:** 15mm
C: 35mm **D:** 39.5mm

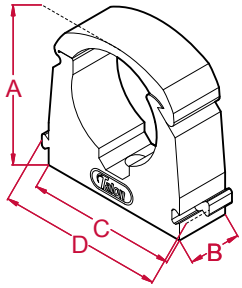

TS28
28mm Single Hinged Clip
A: 44.5mm **B:** 15mm
C: 43mm **D:** 47.5mm

The Talon Flexi Hinged Clips

Flexi Hinged Clips

The Flexi Clip range offers the user a clip capable of holding pipe of varying diameters between an upper and lower limit. Also compatible with PEX pipe, MDPE and PVC pipework.

Colours & sizes

Natural		Black	Light Blue
14mm (12.7 - 14mm)	25mm (25- 27.4mm)	20mm (19 - 21mm)	20mm (19 - 21mm)
16mm (15 - 16mm)	35mm (31.8 - 35mm)	25mm (25- 27.4mm)	25mm (25- 27.4mm)
20mm (19 - 21mm)		35mm (31.8 - 35mm)	35mm (31.8 - 35mm)

Reducers and Spacers also available, see data sheets for more details.

Flexi Hinged Clips

Compatible with size 10 countersunk screw.

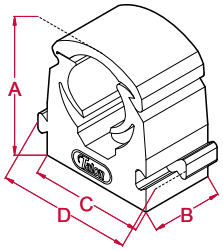

TS14
12.7-14mm Flexi Hinged Clip
A: 28.1mm **B:** 15mm
C: 24mm **D:** 28.5mm

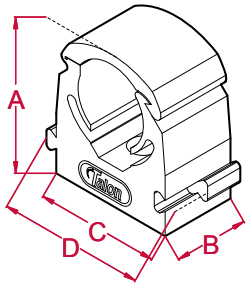

TS16
15-16mm Flexi Hinged Clip
A: 30mm **B:** 15mm
C: 25mm **D:** 29.5mm

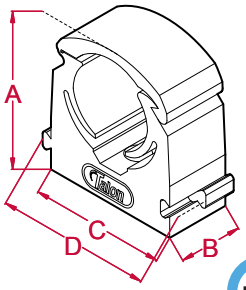

MDPE

TS20
19-21mm Flexi Hinged Clip
A: 35.85mm **B:** 15mm
C: 32mm **D:** 36.5mm

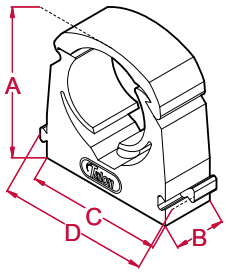

MDPE

TS25
25-27.4mm Flexi Hinged Clip
A: 43mm **B:** 15mm
C: 40mm **D:** 44.5mm

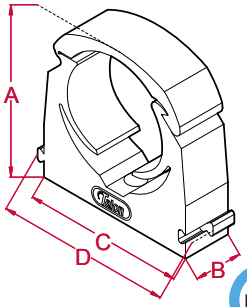

MDPE

TS35
31.8-35mm Flexi Hinged Clip
A: 51.65mm **B:** 15mm
C: 50mm **D:** 54.5mm

The Talon Double Hinged Clips

Double Hinged Clips

To complement the Single Clip, Talon also offers a range of Double Hinged Clips. Double Clips are easy to fit requiring only a single central screw fixing. The Double Clip is also designed for use in conjucntion with Talon Pipe Cover.

Colours & sizes

Natural

10mm

15mm

22mm

Reducers and Spacers also available, see data sheets for more details.

Double Hinged Clips

Compatible with size 6 countersunk screw.

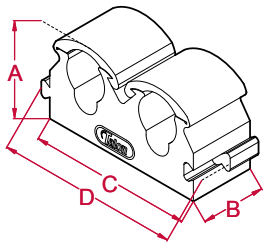

TD10
10mm Double Hinged Clip
A: 21.4mm **B:** 15mm
C: 38mm **D:** 42.5mm

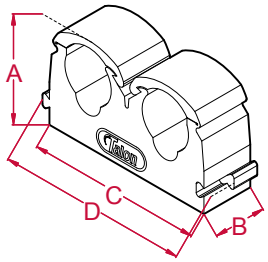

TD15
15mm Double Hinged Clip
A: 30mm **B:** 15mm
C: 50mm **D:** 54.5mm

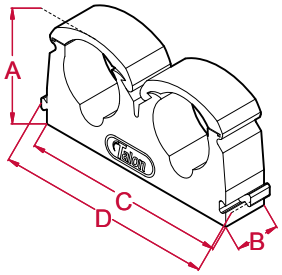

TD22
22mm Double Hinged Clip
A: 38.2mm **B:** 15mm
C: 70mm **D:** 74.5mm

The Talon Hinged Clips

Technical spec

Talon Hinged Clips are supplied in Polypropylene as standard.

Our Talon Hinged Clips are suitable for all pipes including:

PEX | Copper | MDPE | PVC

International Plumbing Pipe Sizes

All sizes are the overall outside diameter of the pipe.

Product Code (Pipe Size)	UK (mm)	Irish (mm)	USA (inches)	AUS (mm)	NZ (mm)
TS10	10				
TS12	12				
TS14	12.7 - 14		1/2	12.7 (DN15)	
TS15	15				
TS16	15 - 16		5/8	15.9 (DN18)	
TS18	18				
TS20	19 - 21	21	3/4	19.1 (DN20)	21.08
TS22	22		7/8		
TS25	25 - 27.4	27.4		25.4 (DN25)	27.43
TS28	28 - 28.6		1 1/8		
TS35	32 - 35	34	1 3/8	31.8 (DN32)	34.19
TD10	10				
TD15	15				
TD22	22		7/8		

Fixing size

Size 6 countersunk screw (UK size)	TS10	to	TS12	/	TD10			=	4mm hole
Size 10 countersunk screw (UK size)	TS14	to	TS28	/	TD15	to	TD22	=	5.5mm hole
Size 10 countersunk screw (UK size)	TS35							=	6mm hole

The Talon Hinged Clips

Technical spec

Safe operating temperature for Polypropylene Clips

65°C is the maximum safe operating temperature for plumbing / gas pipe installations Suitable for hot water pipe in domestic plumbing applications. Tested to withstand temperatures as low as -18°C, and still performed perfectly.

Clip spacing

The preferred spacing between Talon Clips installed along a length of pipe is 500mm.

Load bearing application

Talon Hinged Clips are tested for safe use with plumbing, gas and air conditioning pipe. However, our Hinged Clips are not intended for load bearing applications. Our Clips are designed to grip and hold specified pipe sizes only. A series of Clips spaced at 500mm intervals along a pipe installation will easily hold the natural weight of copper or plastic pipework. For safety considerations please do not attach or hang loads to the pipe installation as this may cause clips to fail.

@Unequaledheating

The Talon Spacers

Talon Spacers

In our Talon Hinged Clip Range we also offer Spacers. Our Standard Spacer creates a clearance from the fixing surface by fitting to the base of all Talon Hinged Clips, this adds a 13mm clearance. Link Spacers are similar but fit between two Talon Hinged Clips setting them a standard distance apart.

Colours & sizes

	Natural	Cold	Gas	Hot	Black
Standard Spacers (Universal Spacer)	One Size	One Size	One Size	One Size	One Size
Link Spacers	Natural				
	One Size				

Standard Spacer (Universal Spacer)

Compatible only with Talon Hinged and Open Clips.

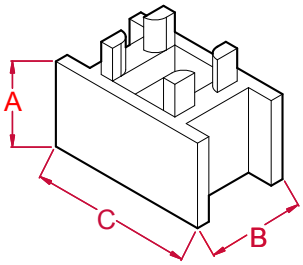

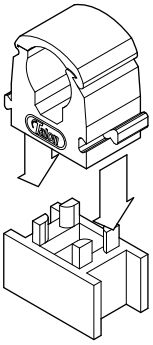

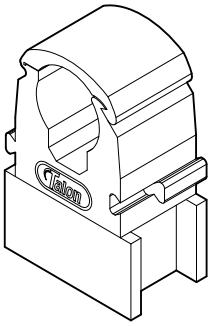

TSP1
Standard Spacer
A: 13mm (wall clearance)
B: 15mm **C:** 25mm

Link Spacer

Compatible only with Talon Hinged Clips.

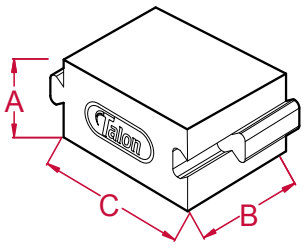

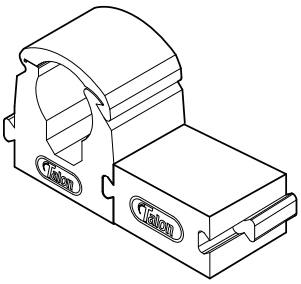

TSPL
Link Spacer
A: TBCmm **B:** TBCmm
C: TBCmm

How to - Talon Standard Spacers

Using a Talon Standard Spacer (Universal Spacer)

Compatible only with Talon Hinged and Open Clips.

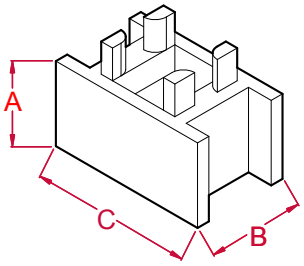

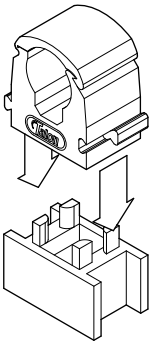

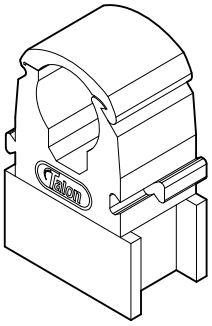

TSP1
Standard Spacer
A: 13mm (wall clearance)
B: 15mm **C:** 25mm

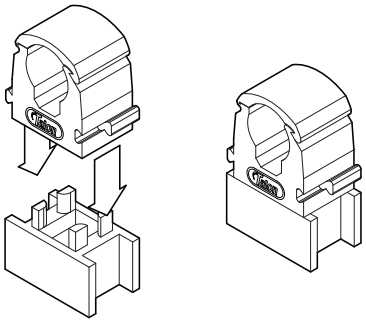

Step 1

Slots into the Talon Hinged Clip base.

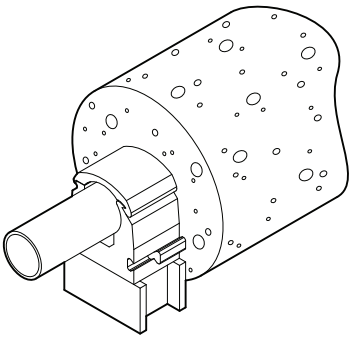

Step 2

Ideal for installations where pipe insulation is required.

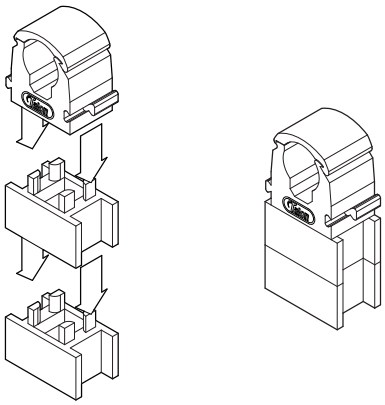

Step 3

Stack multiple spacers for greater wall clearance.

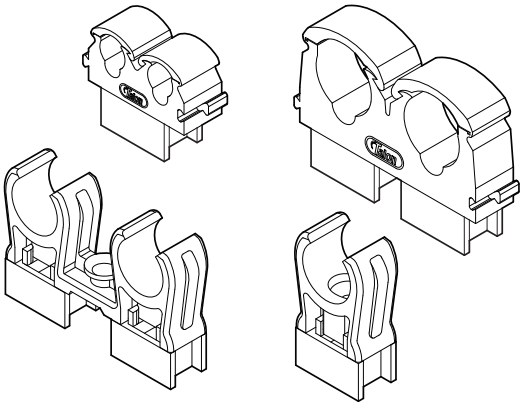

Step 4

Compatible with all Talon Hinged and Open Clips.

The Talon Reducers

Talon Reducers

In our Talon Hinged Clip Range we also offer Reducers. Our Reducers are designed to allow the installation of smaller pipe within a larger clip.

Colours & sizes

Reducers

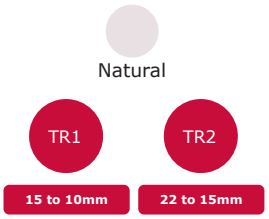

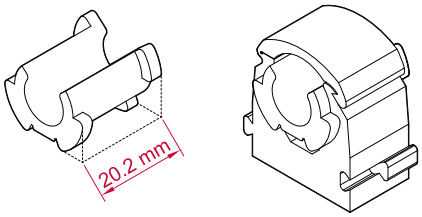

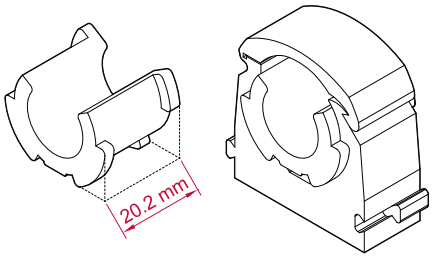

TR1

TR1 Reducer fits inside a 15mm Talon Hinged Clip reducing pipe holding diameter to 10mm.

TR2

TR2 Reducer fits inside a 22mm Talon Hinged Clip reducing pipe holding diameter to 15mm.

How to - Talon Reducers

Using Talon Reducers

Aways fit reducers at 90 degrees for easiest installation.

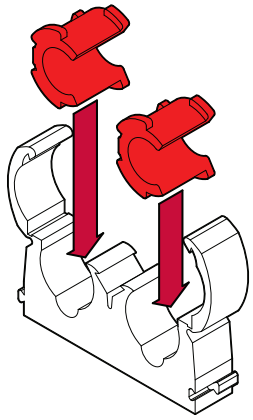

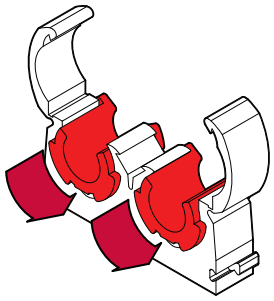

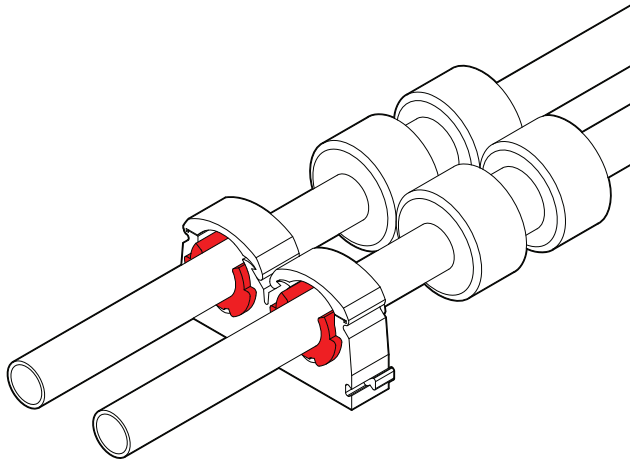

Step 1

Place reducers at 90 degrees to the pipe clip.

Step 2

Turn reducer 90 degrees to lock in place.

Step 3

Install pipe and large fittings.

Using Reducers with Pipe Cover

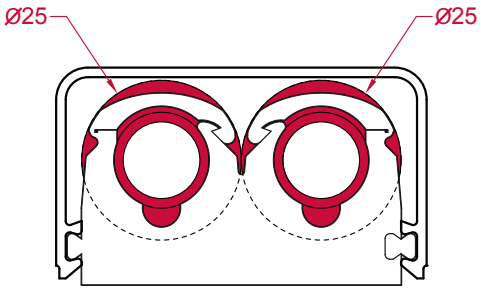

10mm pipe - **CVD15** Pipe Cover allows for a maximum fitting diameter of 25mm.

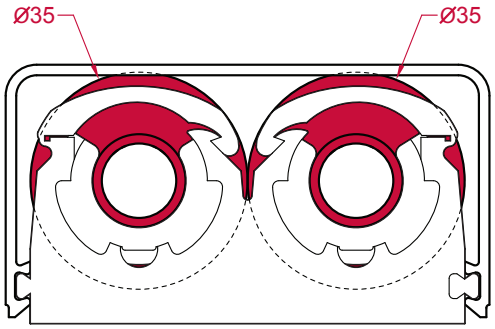

15mm pipe - **CVD22** Pipe Cover allows for a maximum fitting diameter of 35mm

TR1

10mm pipe with 15mm Talon Hinged Clip under 15mm Pipe Cover using a **TR1** Reducer.

TR2

15mm pipe with 22mm Talon Hinged Clip under 22mm Pipe Cover using a **TR2** Reducer.

How to - Talon Reducers

Using Talon TR1 Reducers with the Swept Bend Guide

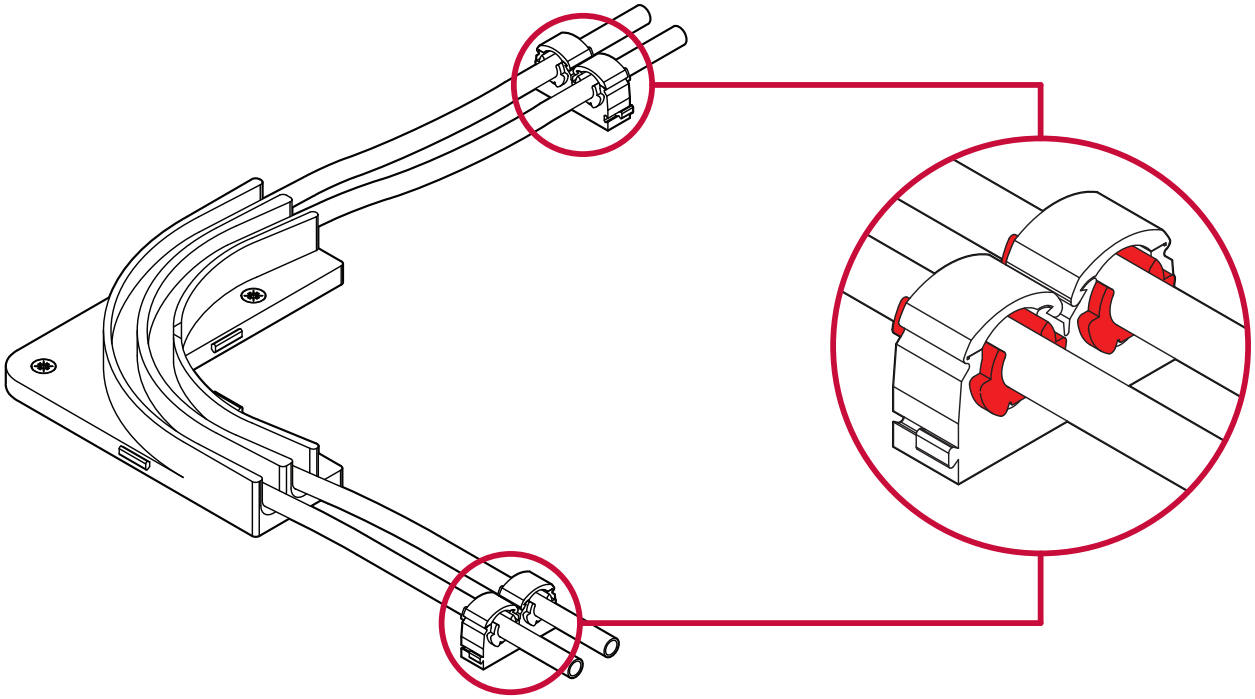

Step 1

The **TR1** Reducer is ideal for use with the Talon Swept Bend Guide (**AD15SBG**). Install reducers in 15mm Talon Hinged Clips to hold double 10mm pipe.

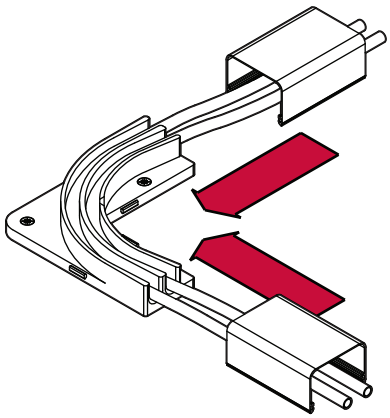

Step 2

Cover and finish the Install with 15mm Double Pipe Cover **CVD15** Pipe Cover.

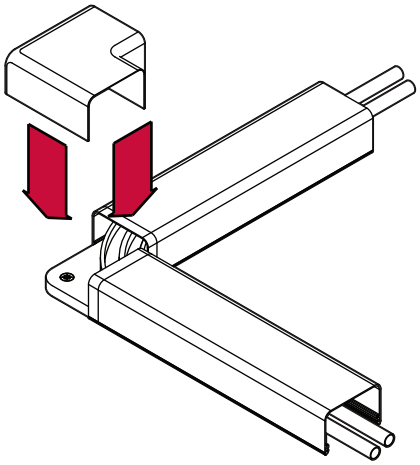

Step 3

Add Flat Corner Accessory.

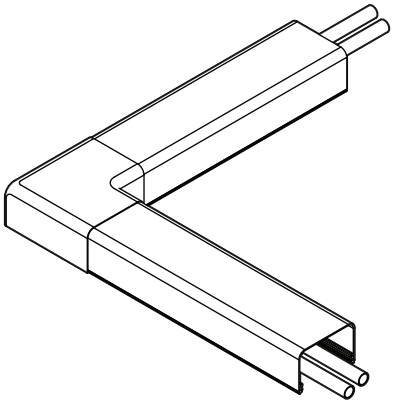

Step 4

Finished Installation.

See Swept Bend Guide data sheet for more details.