Talon PIPE SNUG

BUILDING REGULATIONS PART L COMPLIANT CONSERVATION OF FUEL & POWER

Code	Colour	Size	Pack Qty
PSB32	Black	32mm	Pack of 2
PSW32	White	32mm	Pack of 2

32mm

Talon PIPE SNUG

32mm

- Designed to fit 32mm 90 degree or swept solvent weld elbow bends (all UK manufacturer brands).
- Complies with Part L Building Regulations.
- Can be used internally and externally.
- For use with solvent weld waste pipe systems and boiler condensate pipes when fed into larger diameter 32mm waste to go externally.

Core Drill Size	L (mm)	W (mm)	H (mm)	Wgt (kg)	Material (Part 1)	Material (Part 2)	Colours
52mm	75	75	28	0.024	Polypropylene with UV 91872 hindered amine light stabiliser (HALS) additive	TPE (thermoplastic elastomer) with heat and UV stabliliser	Black, White, Grey & Olive Grey

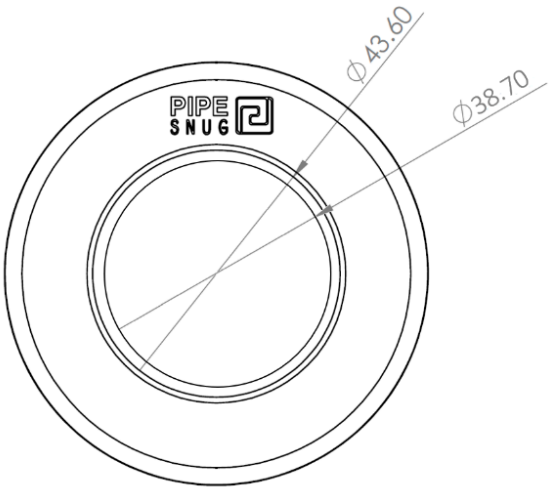

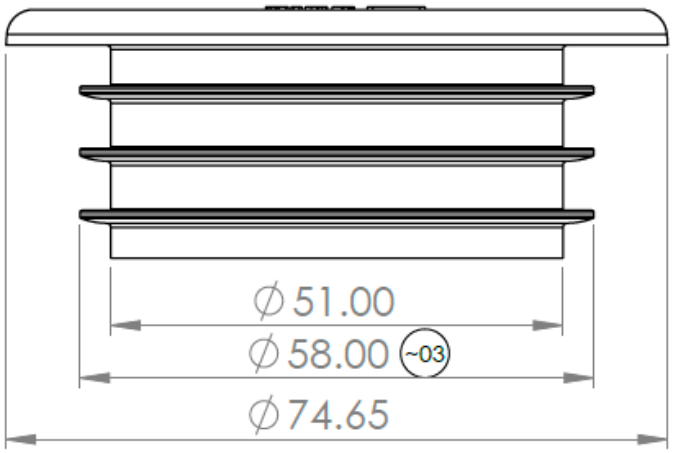

Installation Instructions

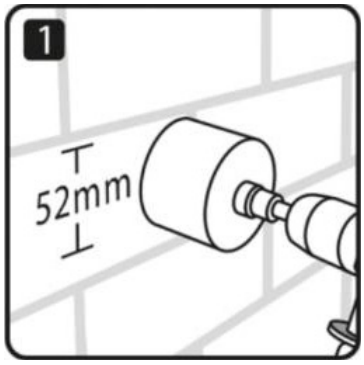

Core drill hole using standard 52mm core

Insert PipeSnug into core-drilled hole

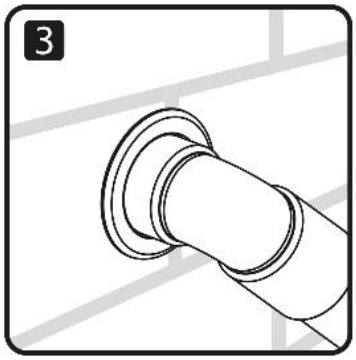

Connect up pipework in usual way

Talon® PIPE SNUG

40mm

- Designed to fit 40mm 90 degree or swept solvent weld elbow bends (all UK manufacturer brands).
- Complies with Part L Building Regulations.
- Can be used internally and externally.
- For use with solvent weld waste pipe systems and boiler condensate pipes when fed into larger diameter 32mm waste to go externally.

Core Drill Size	L (mm)	W (mm)	H (mm)	Wgt (kg)	Material (Part 1)	Material (Part 2)	Colours
52mm	75	75	28	0.018	Polypropylene with UV 91872 hindered amine light stabiliser (HALS) additive	TPE (thermoplastic elastomer) with heat and UV stabliliser	Black, White, Grey & Olive Grey

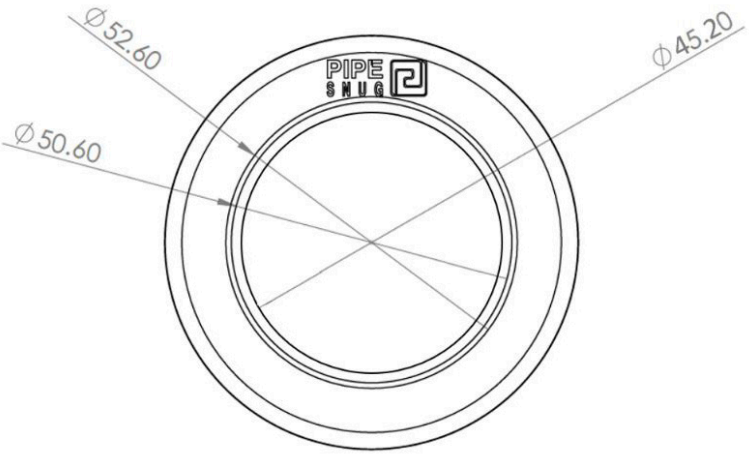

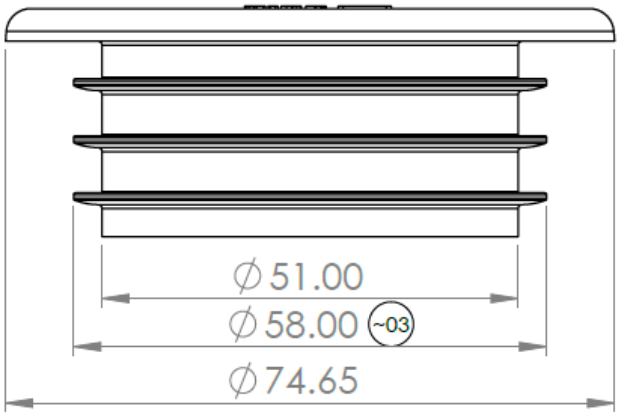

Installation Instructions

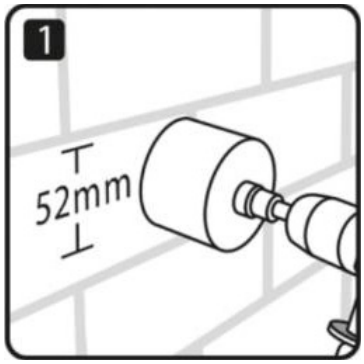

Core drill hole using standard 52mm core

Insert PipeSnug into core-drilled hole

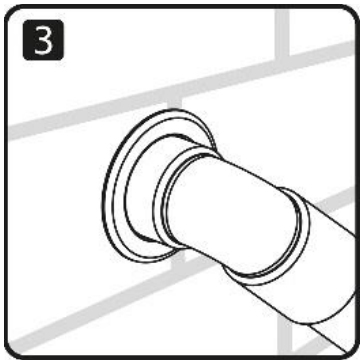

Connect up pipework in usual way